SAGINAW CONTROL & ENGINEERING
SCE-60EL3624SSFS

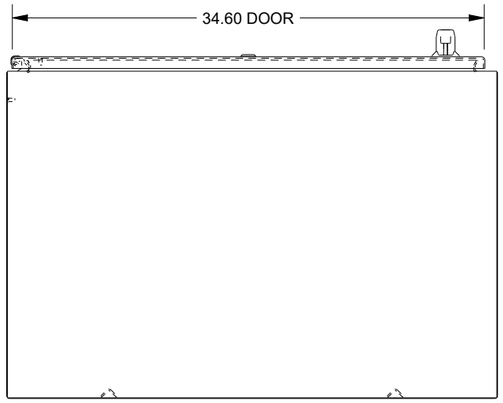

BOTTOM VIEW

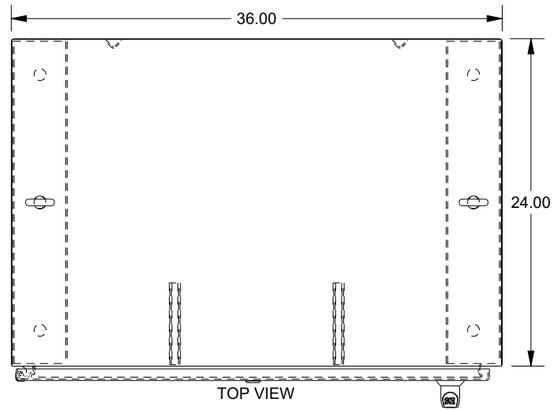

TOP VIEW

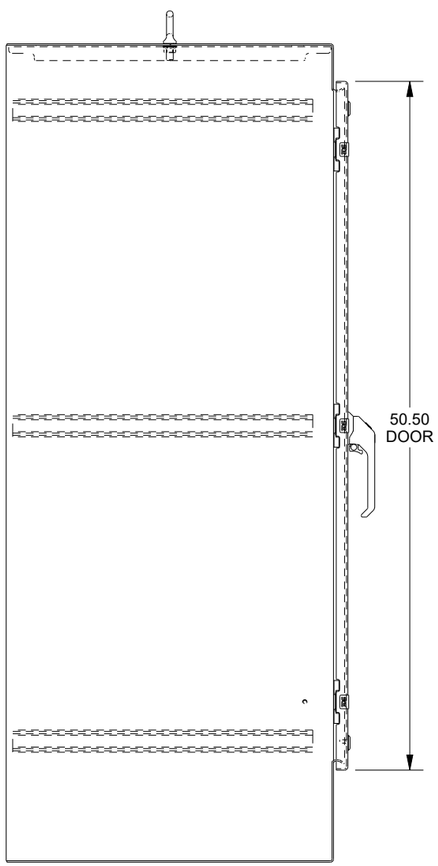

LEFT SIDE VIEW

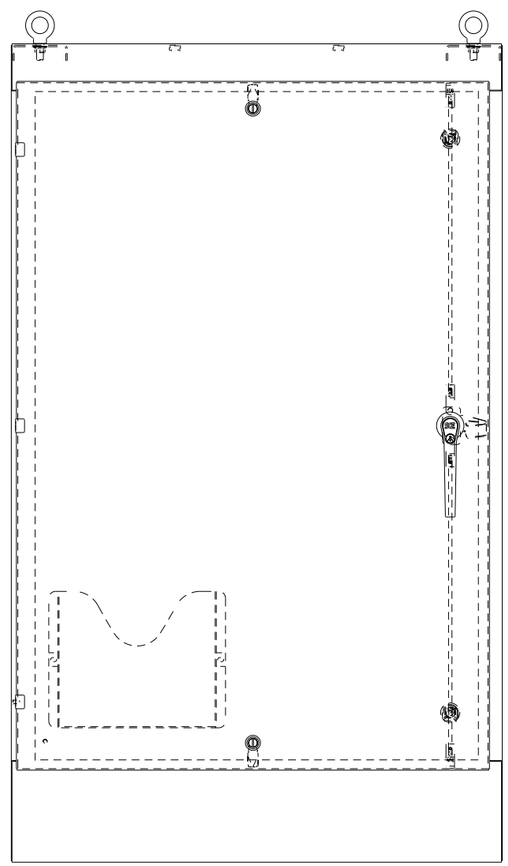

FRONT VIEW

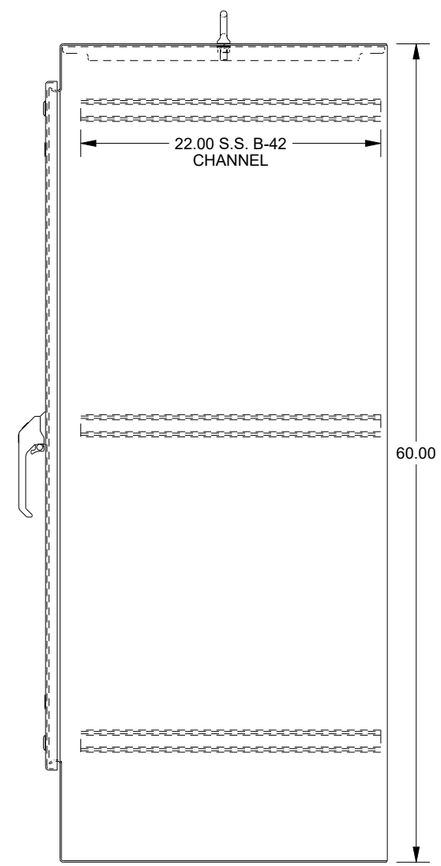

RIGHT SIDE VIEW

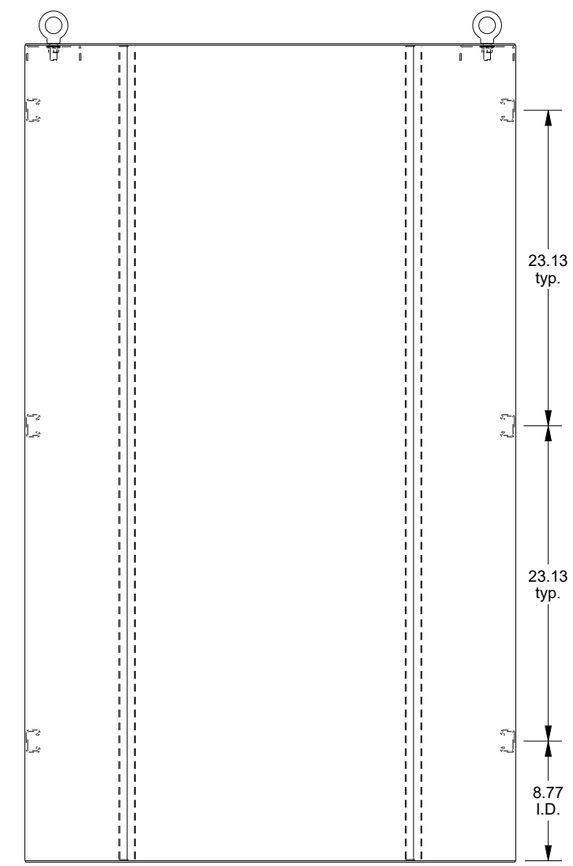

EXTERNAL REAR VIEW

DATA SUBJECT TO CHANGE WITHOUT NOTICE